# FUP430
# Spare parts catalogue

Duun Industrier as
7630 Åsen, Norway
www.duun.no

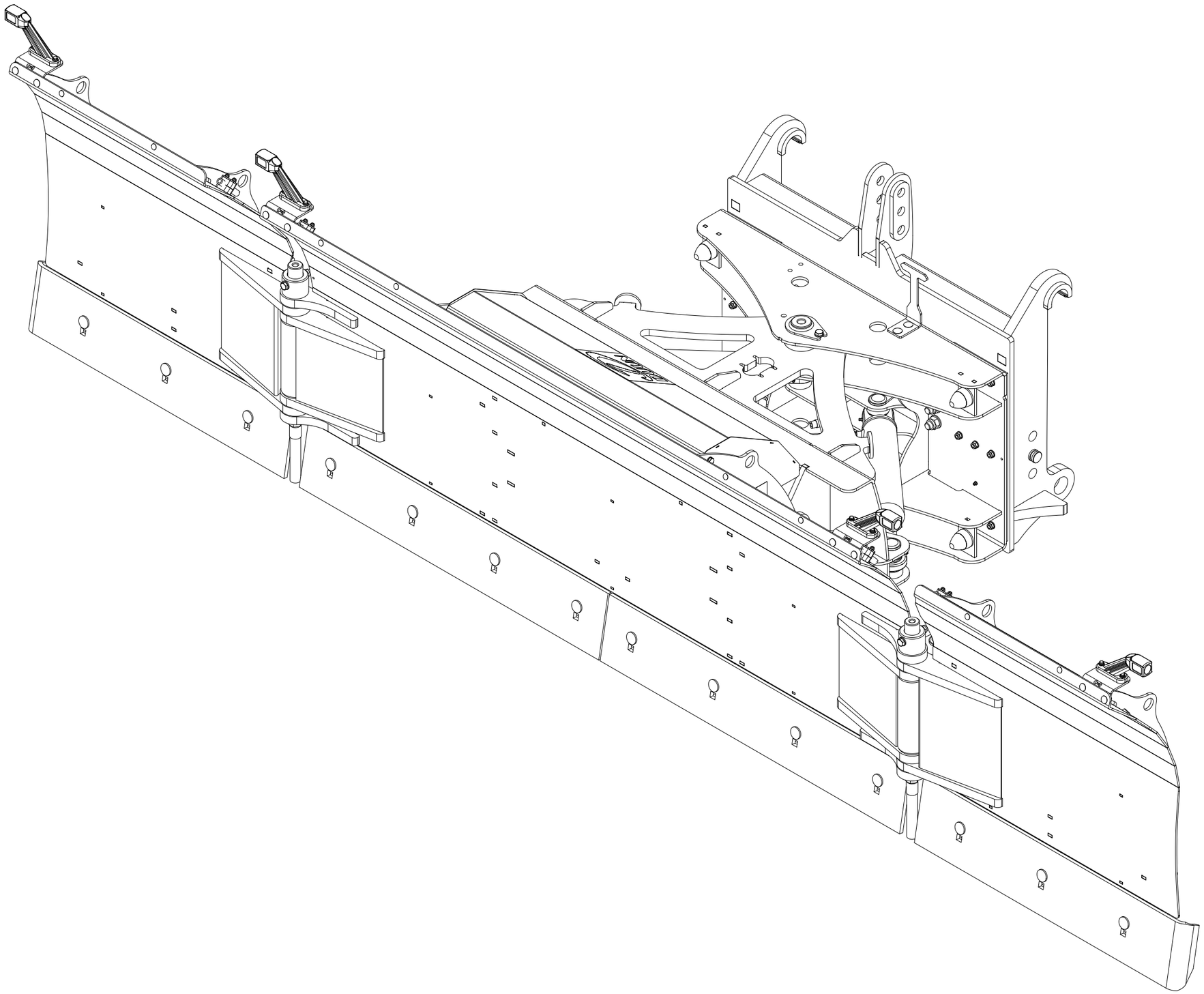

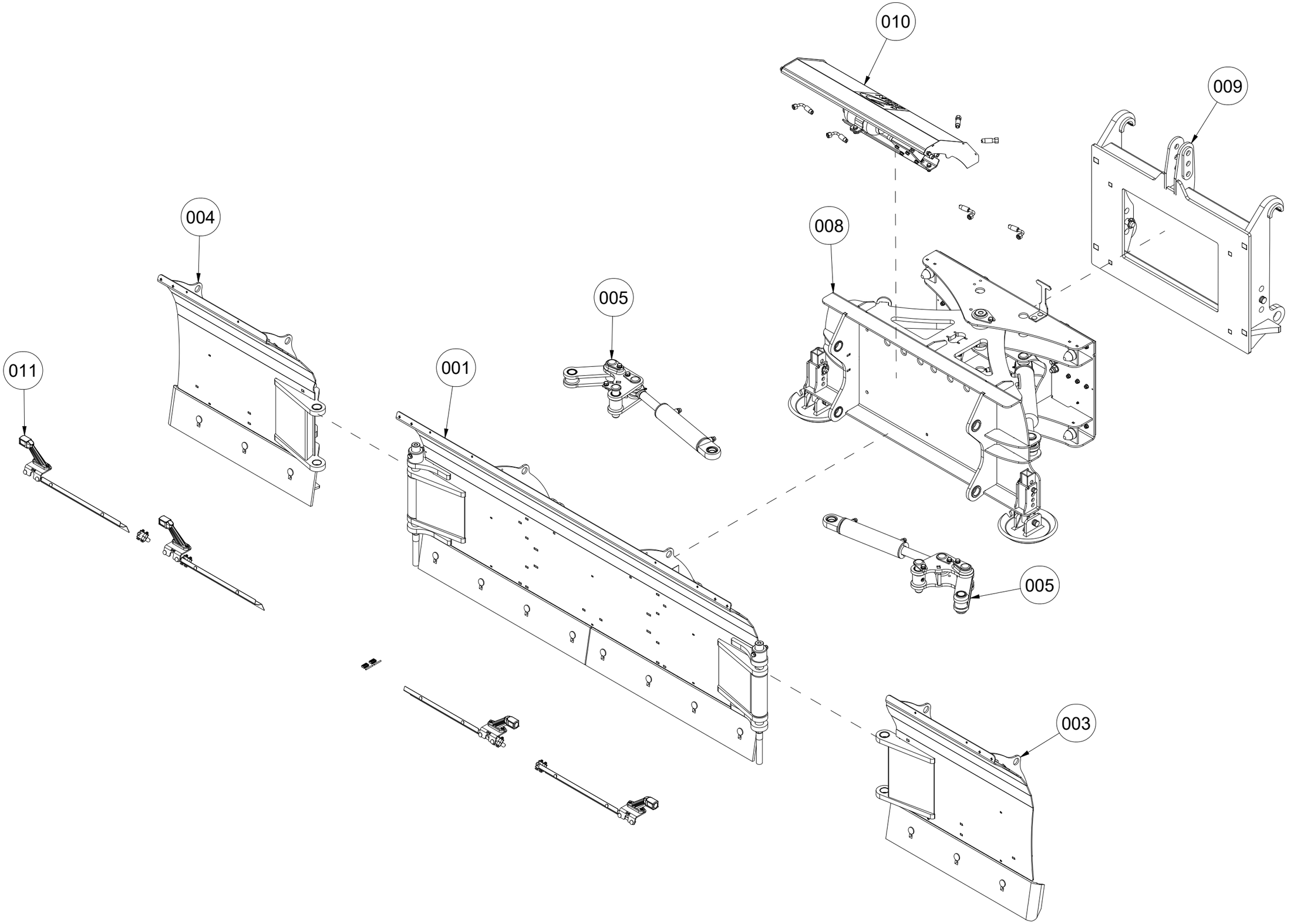
010
009
004
008
005
001
011
005
003

# 001 The main blade FUP430

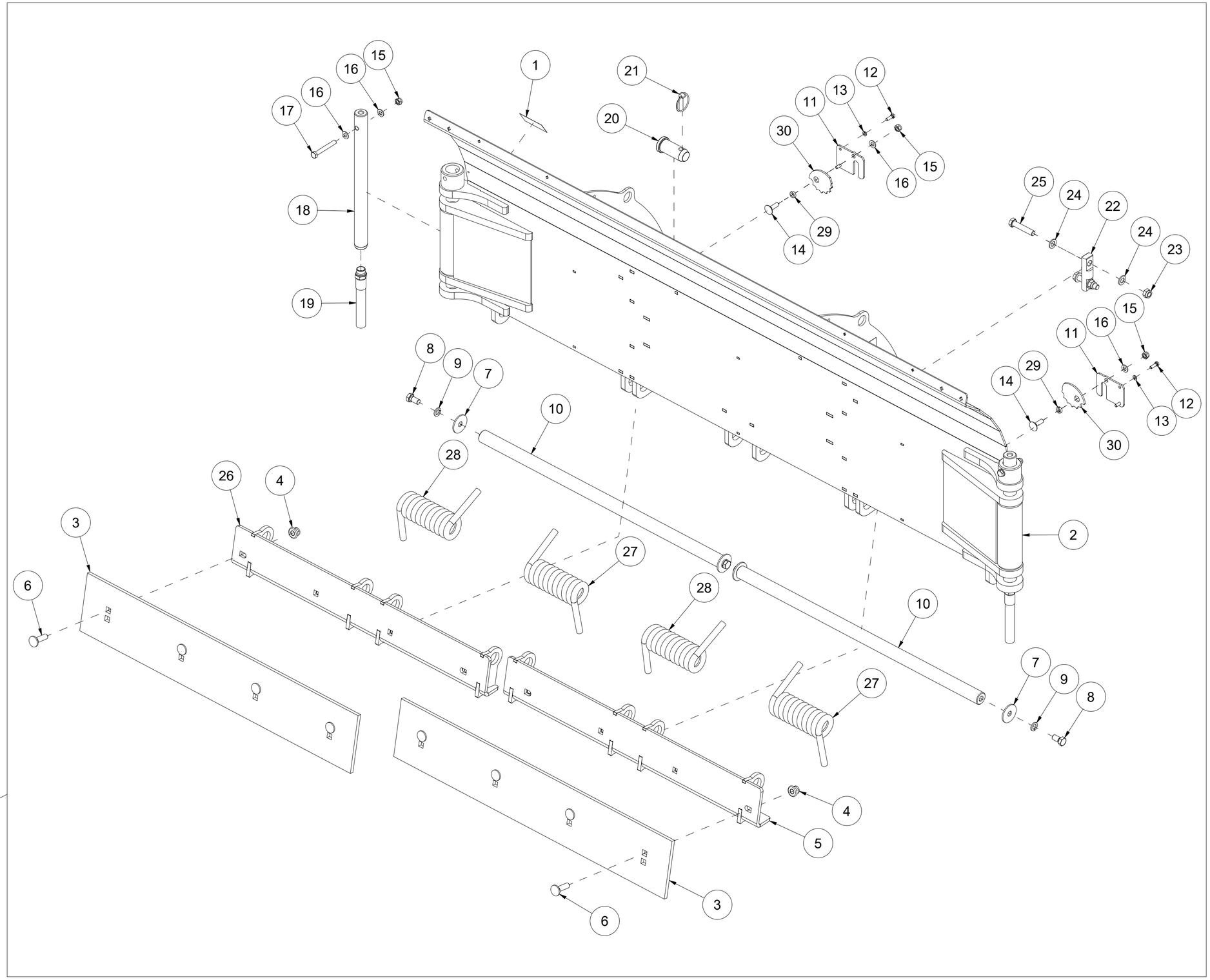


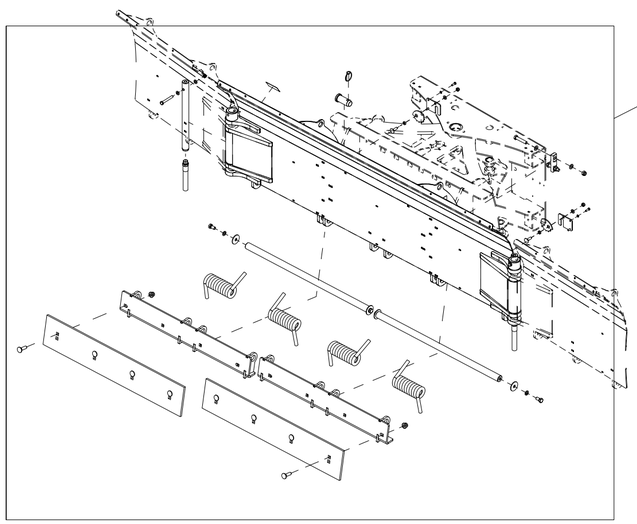

| Pos | Qty | Article no | Designation |
|---|---|---|---|
| 1 | 2 | 2935088 | Adhesive label 90x48 Hand pinch hazard |
| 2 | 1 | 24102101 | The main blade L2294 |
| 3 | 2 | 2112227 | Flat wear steel 12x200x1114 |
| 4 | 8 | 2489175 | Locking nut with flange M16 ElZn DIN 6926 |
| 5 | 1 | 24102106 | Left give away plate of the main blade L1049 |
| 6 | 8 | 2343494 | Locking screw M16x55 St 12.9 |
| 7 | 4 | 23521053 | Washer Ø17/60x4 |
| 8 | 4 | 2422485 | Hexagon screw M16x30 ElZn 8.8 DIN 933 |
| 9 | 4 | 2534078 | Spring washer M16 ElZn DIN 127 |
| 10 | 2 | 24102108 | Shaft for spring releaser Ø40x961 |
| 11 | 4 | 24101027 | Lid for spring tensioner |
| 12 | 8 | 2422246 | Hexagon screw M8x25 ElZn 8.8 DIN 933 |
| 13 | 8 | 2534047 | Spring washer M8 ElZn DIN 127 |
| 14 | 4 | 2344352 | Locking screw M12x40 ElZn 8.8 DIN 603 |
| 15 | 6 | 2483611 | Locking nut M12 ElZn DIN 985 |
| 16 | 8 | 2531069 | Washer M12 ElZn DIN 125 |
| 17 | 2 | 2422364 | Hexagon screw M12x90 ElZn 8.8 DIN 931 |
| 18 | 2 | 24101069 | Hinge bolt Ø40x498 |
| 19 | 2 | 24101070 | Scraper L195 |
| 20 | 4 | 24101033 | Fastening bolt Ø40x90 |
| 21 | 4 | 2556145 | Linch pin Ø12x50 |
| 22 | 2 | 24101026 | Cylinder attachment bolt |
| 23 | 4 | 2483613 | Locking nut M16 ElZn DIN 985 |
| 24 | 8 | 2531078 | Washer M16 ElZn DIN 125 |
| 25 | 4 | 2422500 | Hexagon screw M16x80 ElZn 8.8 DIN 931 |
| 26 | 1 | 24102107 | Right give away plate of the main blade L1049 |
| 27 | 2 | 24201042 | Spring for shear trigger Ø19 L224 VV |
| 28 | 2 | 24201043 | Spring for shear trigger Ø19 L224 HV |
| 29 | 4 | 41311076 | Washer Ø12,2/20x6 |
| 30 | 4 | 24101114 | Spring tensioner v2 |

# 003 Left side wing FUP430

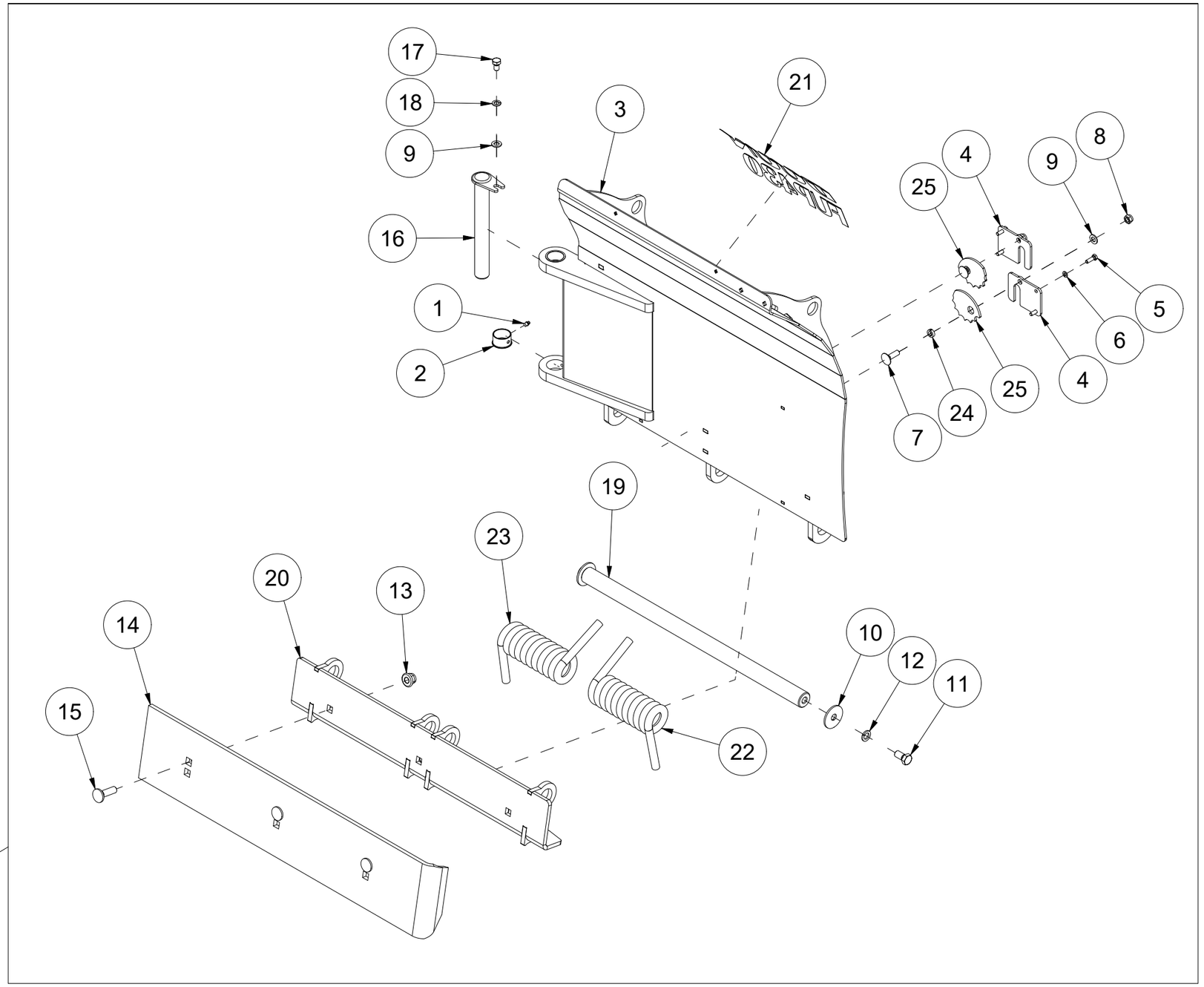


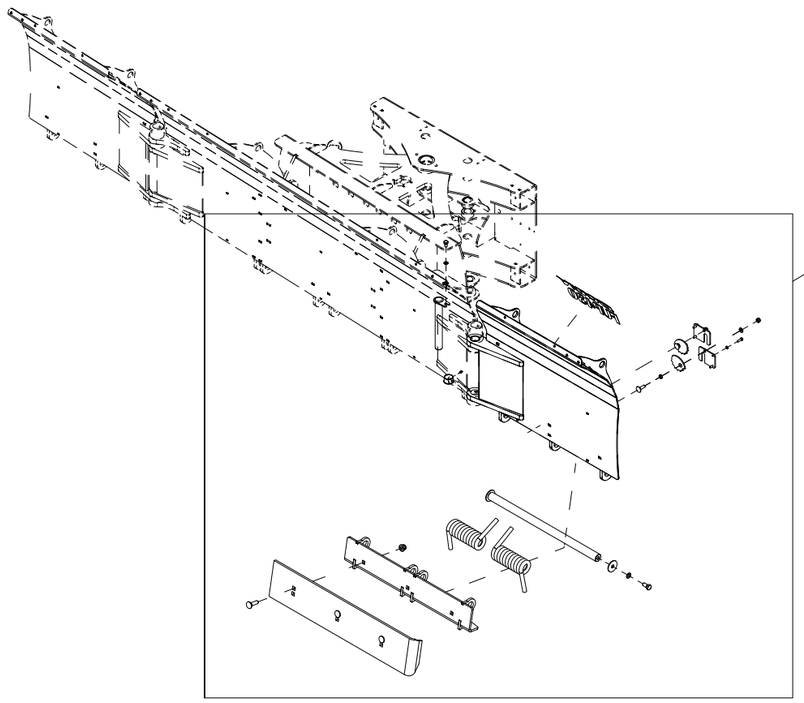

| Pos | Qty | Article no | Designation |
|---|---|---|---|
| 1 | 2 | 2478407 | Grease nipple, Straight M8 |
| 2 | 2 | 2245252 | Bushing with flange Ø40/44x25 |
| 3 | 1 | 24102100 | Left side wing L1265 v2 |
| 4 | 2 | 24101027 | Lid for spring tensioner |
| 5 | 4 | 2422246 | Hexagon screw M8x25 ElZn 8.8 DIN 933 |
| 6 | 4 | 2534047 | Spring washer M8 ElZn DIN 127 |
| 7 | 2 | 2344352 | Locking screw M12x40 ElZn 8.8 DIN 603 |
| 8 | 2 | 2483611 | Locking nut M12 ElZn DIN 985 |
| 9 | 3 | 2531069 | Washer M12 ElZn DIN 125 |
| 10 | 2 | 23521053 | Washer Ø17/60x4 |
| 11 | 2 | 2422485 | Hexagon screw M16x30 ElZn 8.8 DIN 933 |
| 12 | 2 | 2534078 | Spring washer M16 ElZn DIN 127 |
| 13 | 3 | 2489175 | Locking nut with flange M16 ElZn DIN 6926 |
| 14 | 1 | 2112247 | Wear steel 12x200x965 Endebøy |
| 15 | 3 | 2343494 | Locking screw M16x55 St 12.9 |
| 16 | 1 | 24101054 | Bolt Ø35x302 |
| 17 | 1 | 2422344 | Hexagon screw M12x20 ElZn 8.8 DIN 933 |
| 18 | 1 | 2534069 | Spring washer M12 ElZn DIN 127 |
| 19 | 1 | 24102104 | Shaft for spring releaser Ø40x754 |
| 20 | 1 | 24102103 | Give away plate of the side wing L861 |
| 21 | 1 | 2935213 | Adhesive label FUP430 341x200 |
| 22 | 1 | 24201042 | Spring for shear trigger Ø19 L224 VV |
| 23 | 1 | 24201043 | Spring for shear trigger Ø19 L224 HV |
| 24 | 2 | 41311076 | Washer Ø12,2/20x6 |
| 25 | 2 | 24101114 | Spring tensioner v2 |

# 004 Right side wing FUP430

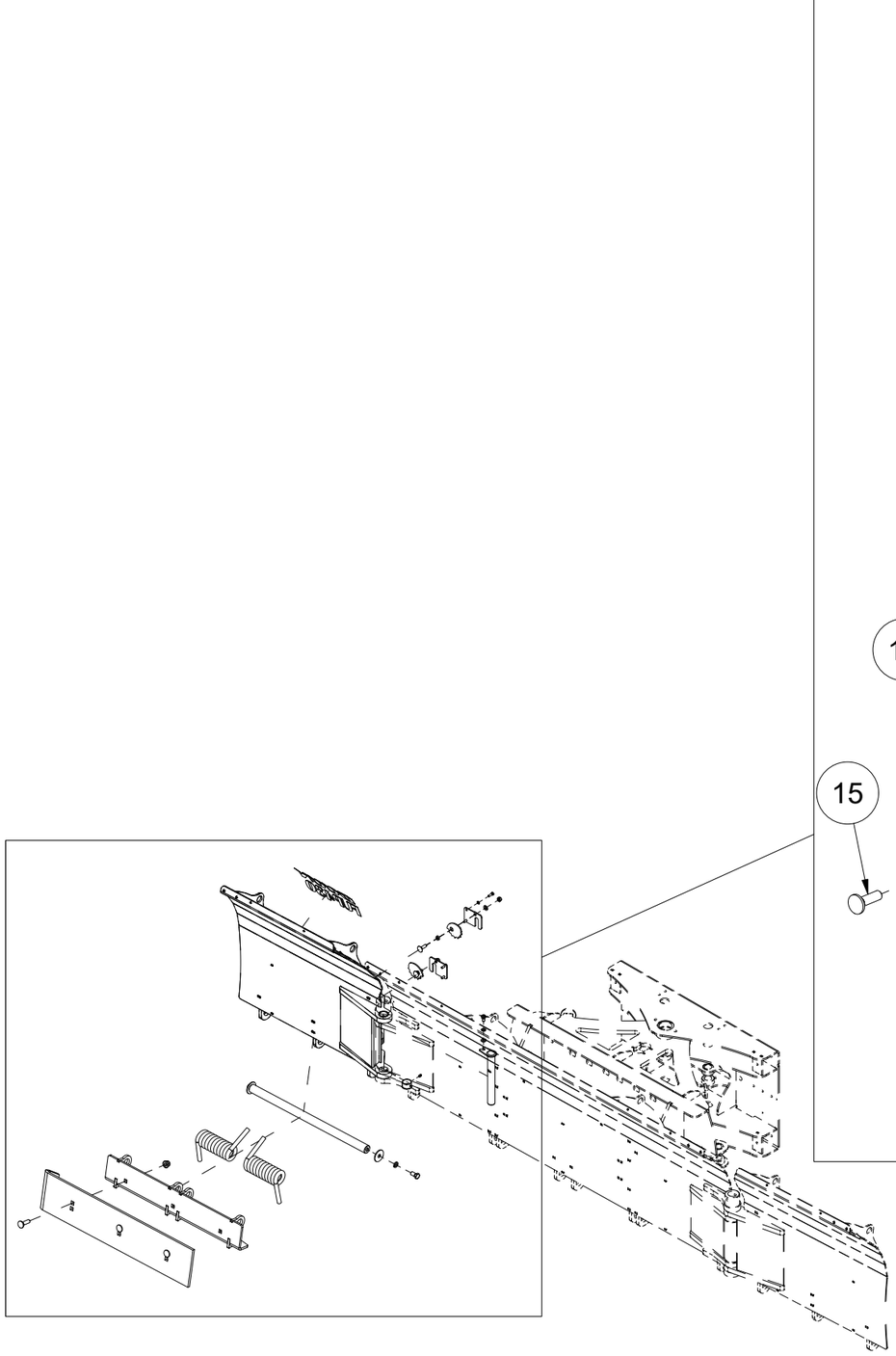

| Pos | Qty | Article no | Designation |
|---|---|---|---|
| 1 | 2 | 24101027 | Lid of spring tensioner |
| 2 | 4 | 2422246 | Hexagon screw M8x25 ElZn 8.8 DIN 933 |
| 3 | 4 | 2534047 | Spring washer M8 ElZn DIN 127 |
| 4 | 2 | 2344352 | Locking screw M12x40 ElZn 8.8 DIN 603 |
| 5 | 2 | 2483611 | Locking nut M12 ElZn DIN 985 |
| 6 | 3 | 2531069 | Washer M12 ElZn DIN 125 |
| 7 | 2 | 2478407 | Grease nipple, Straight M8 |
| 8 | 2 | 2245252 | Bushing with flange Ø40/44x25 |
| 9 | 1 | 24102102 | Right side wing L1265 v2 |
| 10 | 2 | 23521053 | Washer Ø17/60x4 |
| 11 | 2 | 2422485 | Hexagon screw M16x30 ElZn 8.8 DIN 933 |
| 12 | 2 | 2534078 | Spring washer M16 ElZn DIN 127 |
| 13 | 3 | 2489175 | Locking nut with flange M16 ElZn DIN 6926 |
| 14 | 1 | 2112247 | Wear steel 12x200x965 Endebøy |
| 15 | 3 | 2343494 | Locking screw M16x55 St 12.9 |
| 16 | 1 | 24101054 | Bolt Ø35x302 |
| 17 | 1 | 2422344 | Hexagon screw M12x20 ElZn 8.8 DIN 933 |
| 18 | 1 | 2534069 | Spring washer M12 ElZn DIN 127 |
| 19 | 1 | 24102104 | Shaft release spring Ø40x754 |
| 20 | 1 | 24102103 | Give away plate of the side wing L861 |
| 21 | 1 | 2935213 | Adhesive label  FUP430 341x200 |
| 22 | 1 | 24201042 | Spring for shear trigger Ø19 L224 VV |
| 23 | 1 | 24201043 | Spring for shear trigger Ø19 L224 HV |
| 24 | 2 | 24101114 | Spring tensioner v2 |
| 25 | 2 | 41311076 | Washer Ø12,2/20x6 |

# 005 Mechanism of side wing 180° FUP430

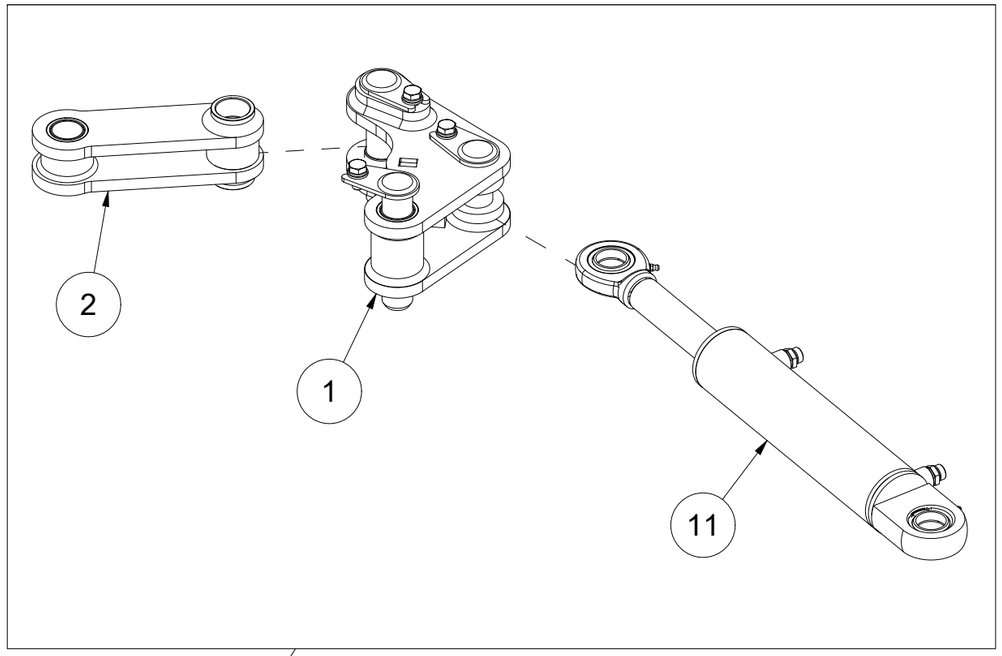




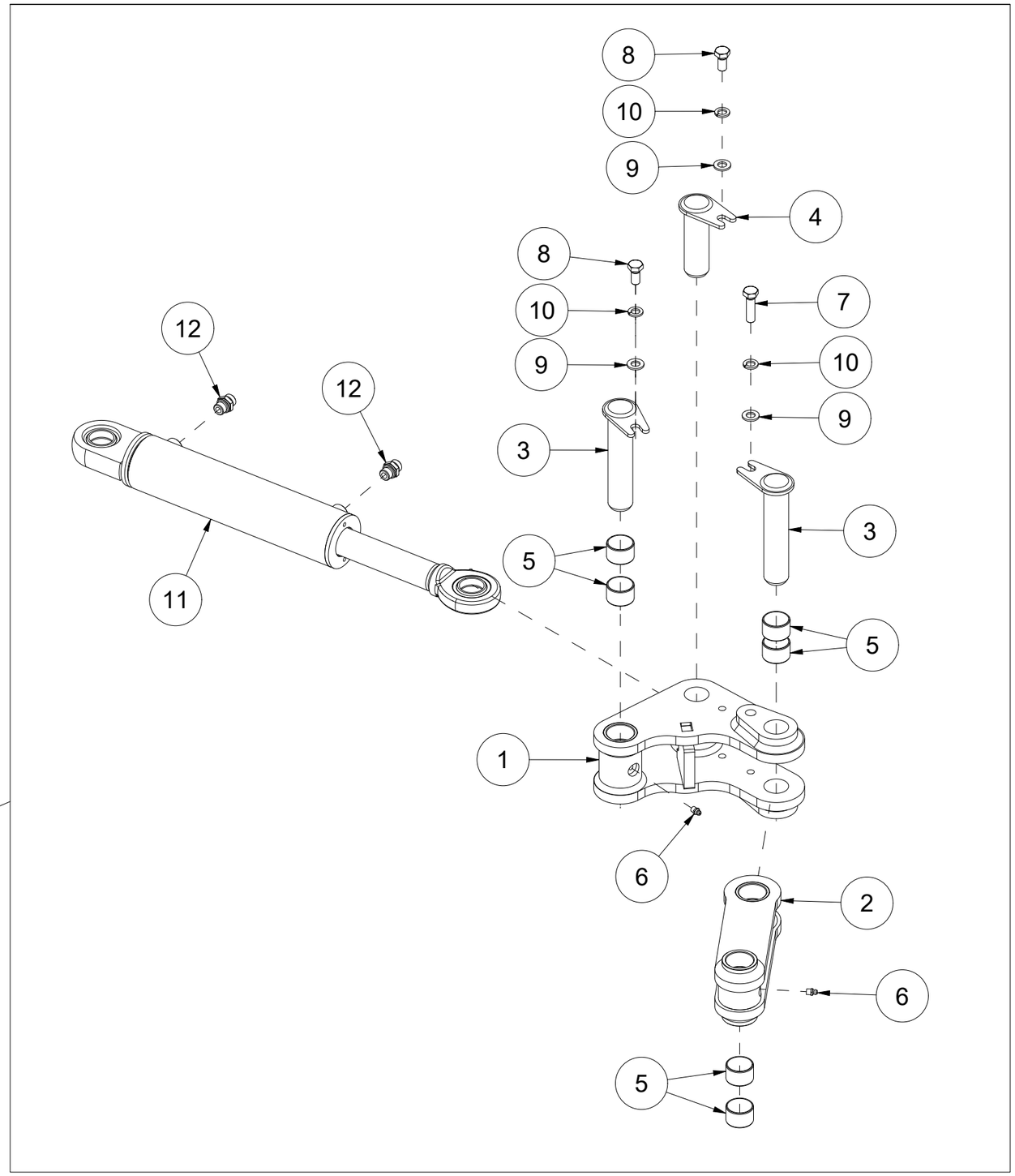

| Pos | Qty | Article no | Designation |
|---|---|---|---|
| 1 | 2 | 24101051 | Connection handle |
| 2 | 2 | 24101052 | Link |
| 3 | 4 | 24101053 | Bolt Ø35x162 |
| 4 | 2 | 24101020 | Bolt Ø35x112 |
| 5 | 12 | 2245251 | Bushing Ø35/39x25 |
| 6 | 6 | 2478407 | Grease nipple, Straight M8 |
| 7 | 2 | 2425354 | Hexagon screw M12x45 ElZn 8.8 DIN 933 |
| 8 | 4 | 2422346 | Hexagon screw M12x25 ElZn 8.8 DIN 933 |
| 9 | 6 | 2531069 | Washer M12 ElZn DIN 125 |
| 10 | 6 | 2534069 | Spring washer M12 ElZn DIN 127 |
| 11 | 2 | 2955009 | Cylinder 70/40x250 I35I35 L485 RAL9005 |
| 12 | 4 | 2957749 | Hexagon nipple GEK BSP 3/8" L12 ED |

# 008 Swivel module FUP430

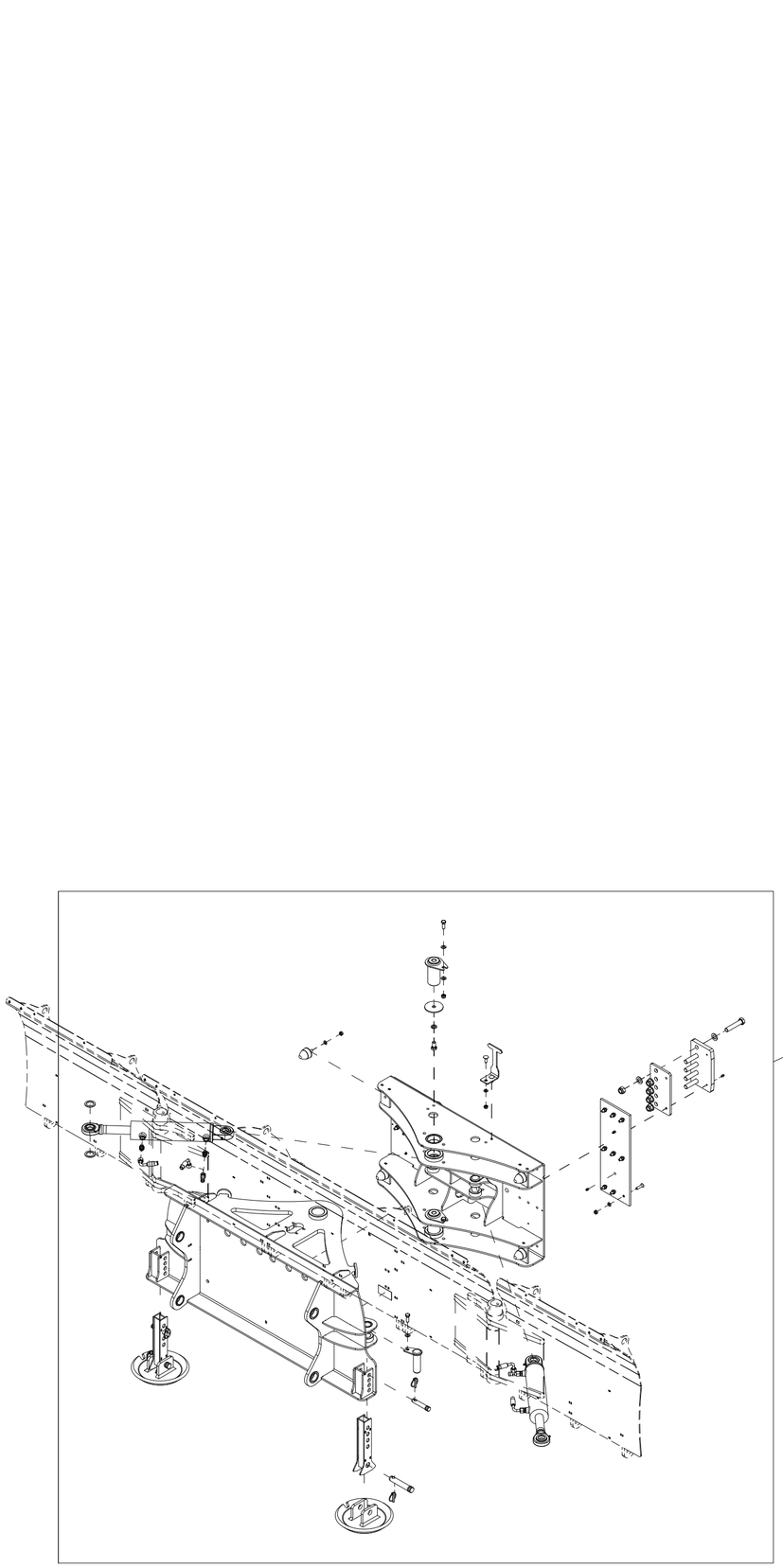

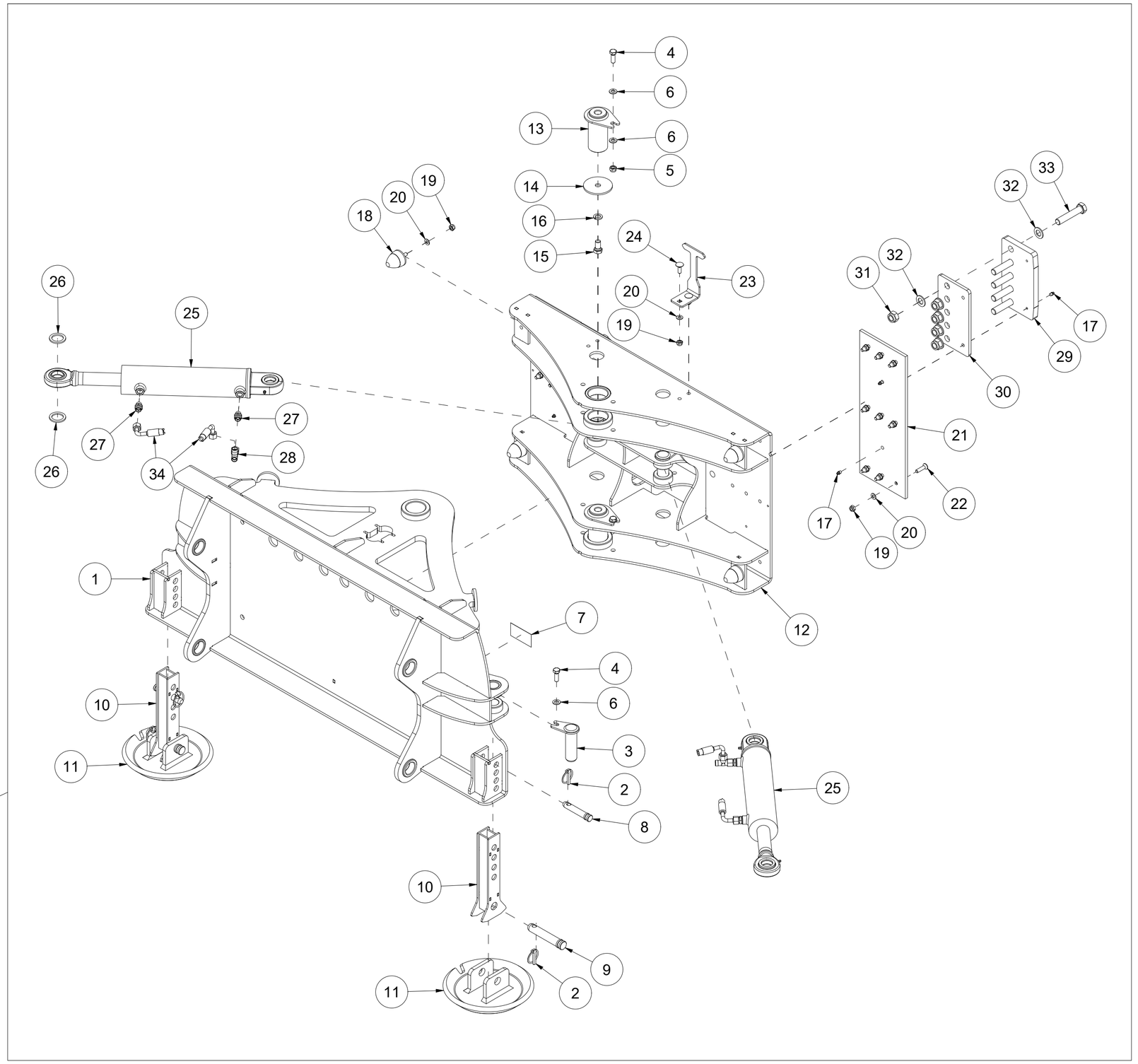

| Pos | Qty | Article no | Designation |
|---|---|---|---|
| 1 | 1 | 24101008 | External swing module |
| 2 | 4 | 2556142 | Linch pin Ø10x40 |
| 3 | 4 | 24101020 | Bolt Ø35x112 |
| 4 | 6 | 2422350 | Hexagon screw M12x35 ElZn 8.8 DIN 933 |
| 5 | 6 | 2483611 | Locking nut M12 ElZn DIN 985 |
| 6 | 12 | 2531069 | Washer M12 ElZn DIN 125 |
| 7 | 2 | 2935088 | Adhesive label 90x48 Hand pinch hazard |
| 8 | 2 | 2526321 | Top strut bolt cat. 1 Ø19x70 |
| 9 | 2 | 2526326 | Top strut bolt cat. 2 Ø25,4x103 |
| 10 | 2 | 24101075 | Bracket |
| 11 | 2 | 24101074 | Skid pad |
| 12 | 1 | 24101009 | Inner swing module |
| 13 | 2 | 24101056 | Bolt Ø60x118 |
| 14 | 2 | 24101057 | Washer Ø17/90x5 |
| 15 | 2 | 2422485 | Hexagon screw M16x30 ElZn 8.8 DIN 933 |
| 16 | 2 | 2534078 | Spring washer M16 ElZn DIN 127 |
| 17 | 8 | 2478407 | Grease nipple, Straight M8 |
| 18 | 4 | 2225110 | Rubber damper Ø52X58 M10 |
| 19 | 24 | 2483610 | Locking nut M10 ElZn DIN 985 |
| 20 | 24 | 2531060 | Washer M10 ElZn DIN 125 |
| 21 | 2 | 24101049 | Sliding rail 200x540x10 |
| 22 | 18 | 2472303 | Unbrako countersunk head screw M10x40 ElZn 10.9 DIN 7991 |
| 23 | 1 | 24101079 | Marker |
| 24 | 2 | 2344331 | Locking screw M10x30 ElZn 8.8 DIN 603 |
| 25 | 2 | 2955008 | Cylinder Ø80/40 SL250 |
| 26 | 8 | 24101060 | Washer Ø36/50,7x4 |
| 27 | 4 | 2957749 | Hexagon nipple GEK BSP 3/8" L12 ED |
| 28 | 2 | 2957723 | T-hexagon nipple EVLK 12L |
| 29 | 2 | 24101040 | Fastening plate |
| 30 | 2 | 24101048 | Sliding rail 135x200x10 |
| 31 | 10 | 2483615 | Locking nut M20 ElZn DIN 985 |
| 32 | 20 | 2531086 | Washer M20 ElZn DIN 125 |
| 33 | 10 | 2422583 | Hexagon screw M20x100 ElZn 8.8 DIN 931 |
| 34 | 2 | 2958378 | Hydraulic hose 3/8" L800 |

# 009 Coupling frame FUP430

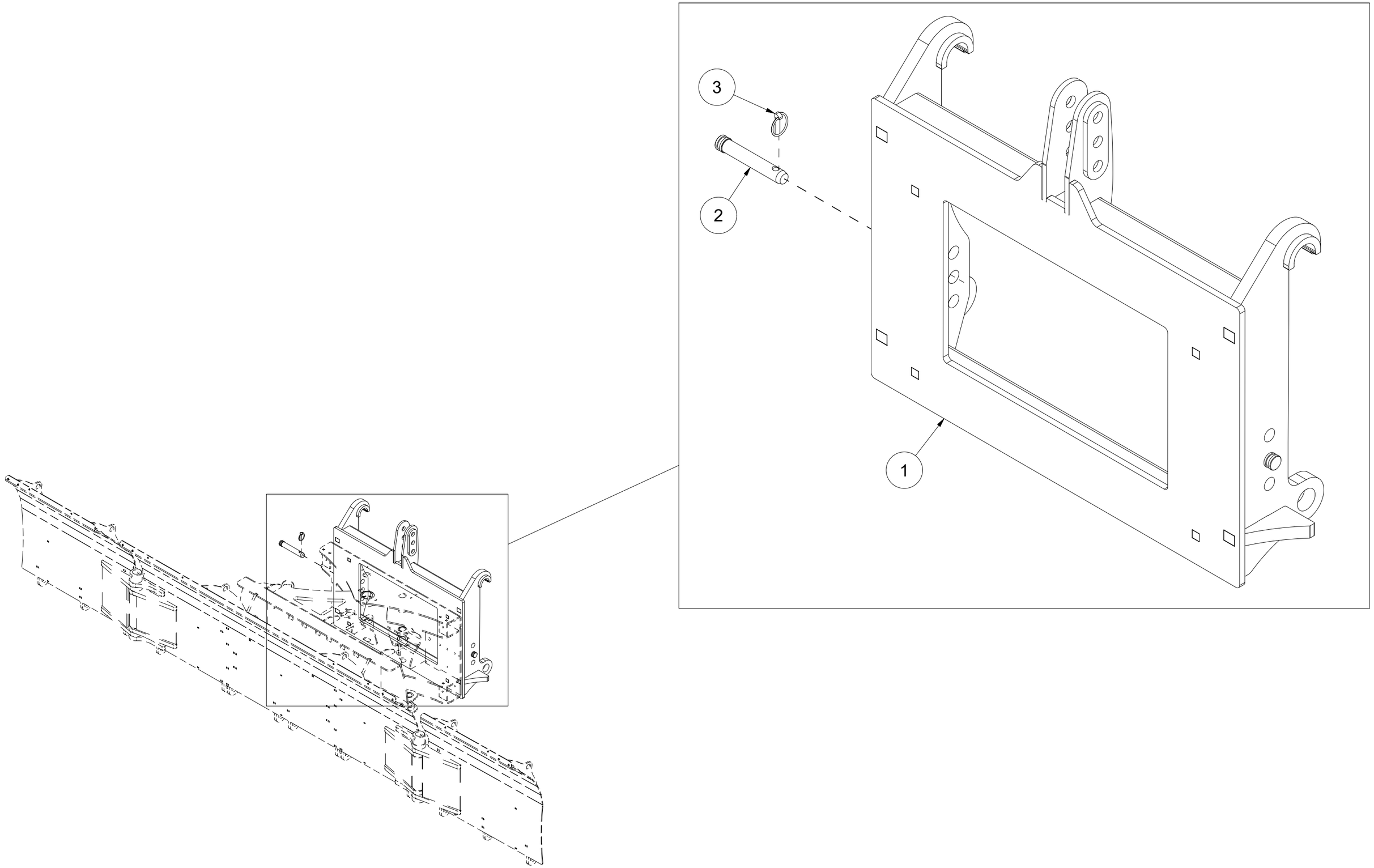

| Pos | Qty | Article no | Designation |
|---|---|---|---|
| 1 | 1 | 24101046 | Coupling frame |
| 2 | 2 | 2551732 | Drawbar bolt cat.  2 Ø28x134 |
| 3 | 2 | 2556142 | Linch pin Ø10x40 |

# 010 Accumulators FUP430 v2

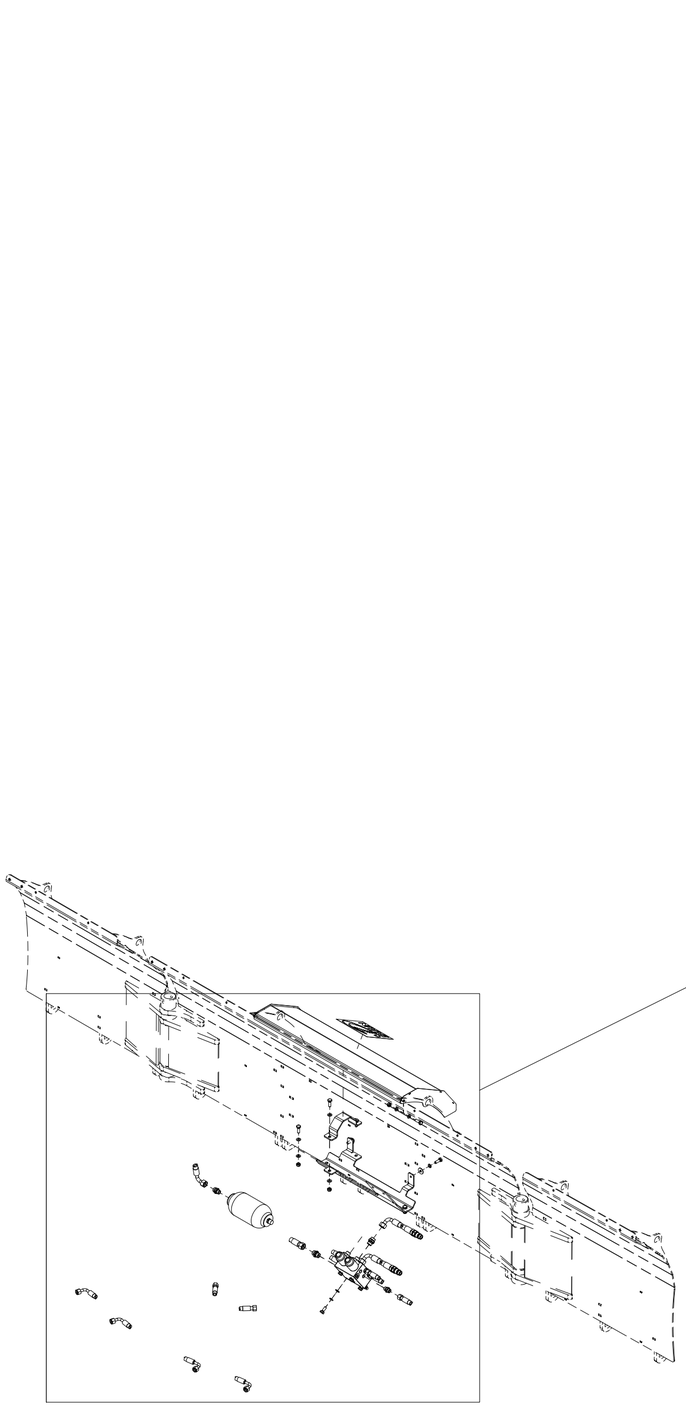

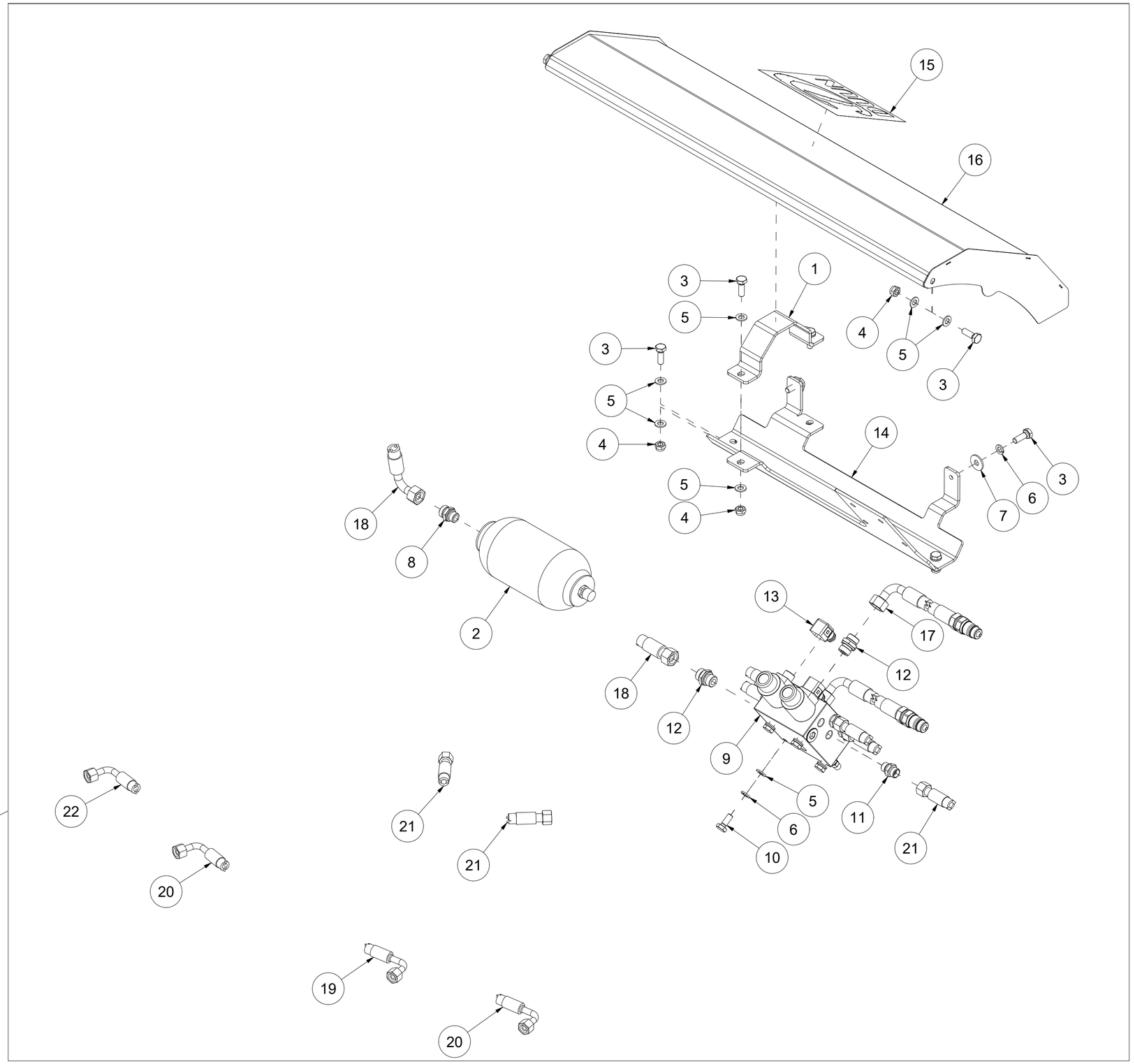

| Pos | Qty | Article no | Designation |
|---|---|---|---|
| 1 | 1 | 24101025 | Clamps |
| 2 | 1 | 2955310 | Accumulator 1,4l TS rotation |
| 3 | 8 | 2422299 | Hexagon screw M10x30 ElZn 8.8 DIN 933 |
| 4 | 6 | 2483610 | Locking nut  M10 ElZn DIN 985 |
| 5 | 16 | 2531060 | Washer M10 ElZn DIN 125 |
| 6 | 6 | 2534060 | Spring washer M10 ElZn DIN 127 |
| 7 | 2 | 2533060 | Body washer M10 ElZn DIN 9021 |
| 8 | 1 | 2957736 | Hexagon nipple GEK M18x1,5 L15 ED |
| 9 | 1 | 2955386 | Hydraulic valve u-plough |
| 10 | 4 | 2422297 | Hexagon screw M10x25 ElZn 8.8 DIN 933 |
| 11 | 6 | 2957749 | Hexagon nipple GEK BSP 3/8" L12 ED |
| 12 | 3 | 2957768 | Hexagon nipple GEK BSP 1/2" L15 ED |
| 13 | 2 | 2957402 | DIN Plug 12/24VV 5,0m LED |
| 14 | 1 | 24101073 | Bracket v3 |
| 15 | 1 | 2935151 | Adhesive label Duun 200x200 |
| 16 | 1 | 24101072 | Cover v2 |
| 17 | 2 | 2958180 | Hydraulic hose 1/2" L3250 |
| 18 | 1 | 2958518 | Hydraulic hose 1/2" L560 |
| 19 | 1 | 2958376 | Hydraulic hose 3/8" L670 |
| 20 | 2 | 2958377 | Hydraulic hose 3/8" L900 |
| 21 | 2 | 2958379 | Hydraulic hose 3/8" L1300 |
| 22 | 1 | 2958383 | Hydraulic hose 3/8" L1100 |

# 011 Lights package v2 FUP430

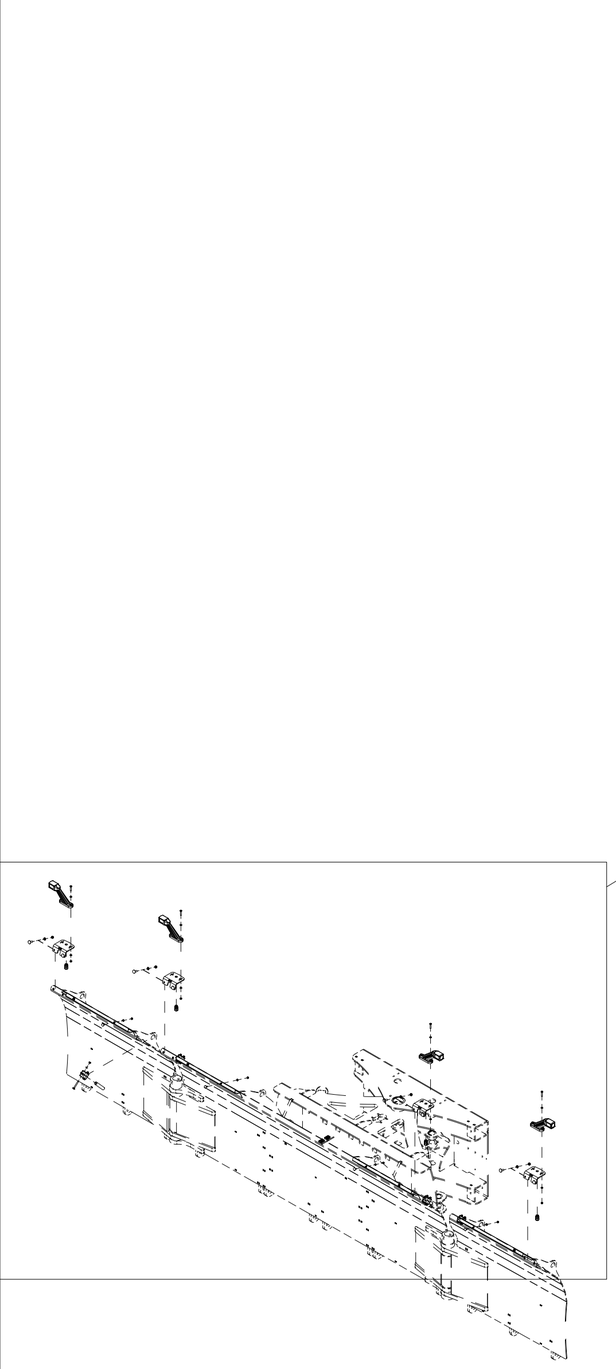

| Pos | Qty | Article no | Designation |
|---|---|---|---|
| 1 | 4 | 24101035 | Light bracket |
| 2 | 4 | 4127613 | Nipple with strain relief M16 |
| 3 | 2 | 4421037 | Right horizontal LED marker light 12/24V |
| 4 | 8 | 2483609 | Locking nut  M8 ElZn DIN 985 |
| 5 | 8 | 2531047 | Washer M8 ElZn DIN 125 |
| 6 | 8 | 2344246 | Locking screw M8x25 ElZn 8.8 DIN 603 |
| 7 | 2 | 4421036 | Left horizontal LED marker light 12/24V |
| 8 | 1 | 24102109 | The main blade wiring cover L530 VS |
| 9 | 8 | 2441200 | Locking screw M6x16 ElZn 8.8 DIN 603 |
| 10 | 24 | 2483608 | Locking nut  M6 ElZn DIN 985 |
| 11 | 32 | 2531039 | Washer M6 ElZn DIN 125 |
| 12 | 1 | 24102112 | The main blade wiring cover L530 HS |
| 13 | 1 | 24102110 | Cable cover - Left wing L591 |
| 14 | 1 | 24102111 | Cable cover - Right wing L591 |
| 15 | 4 | 4251210 | Hose holder Ø15x1 |
| 16 | 8 | 2441217 | Locking screw M6x50 ElZn 8.8 DIN 603 |
| 17 | 1 | 24101087 | Cable 2x0,75 L3700 |
| 18 | 2 | 4124205 | Connection clamp 5p 4mm2 |
| 19 | 8 | 2422209 | Hexagon screw M6x30 ElZn 8.8 DIN 931 |
| 20 | 2 | 24101086 | Hose 3/8 R1T |